CAMILLE BAUER

Rely on us.

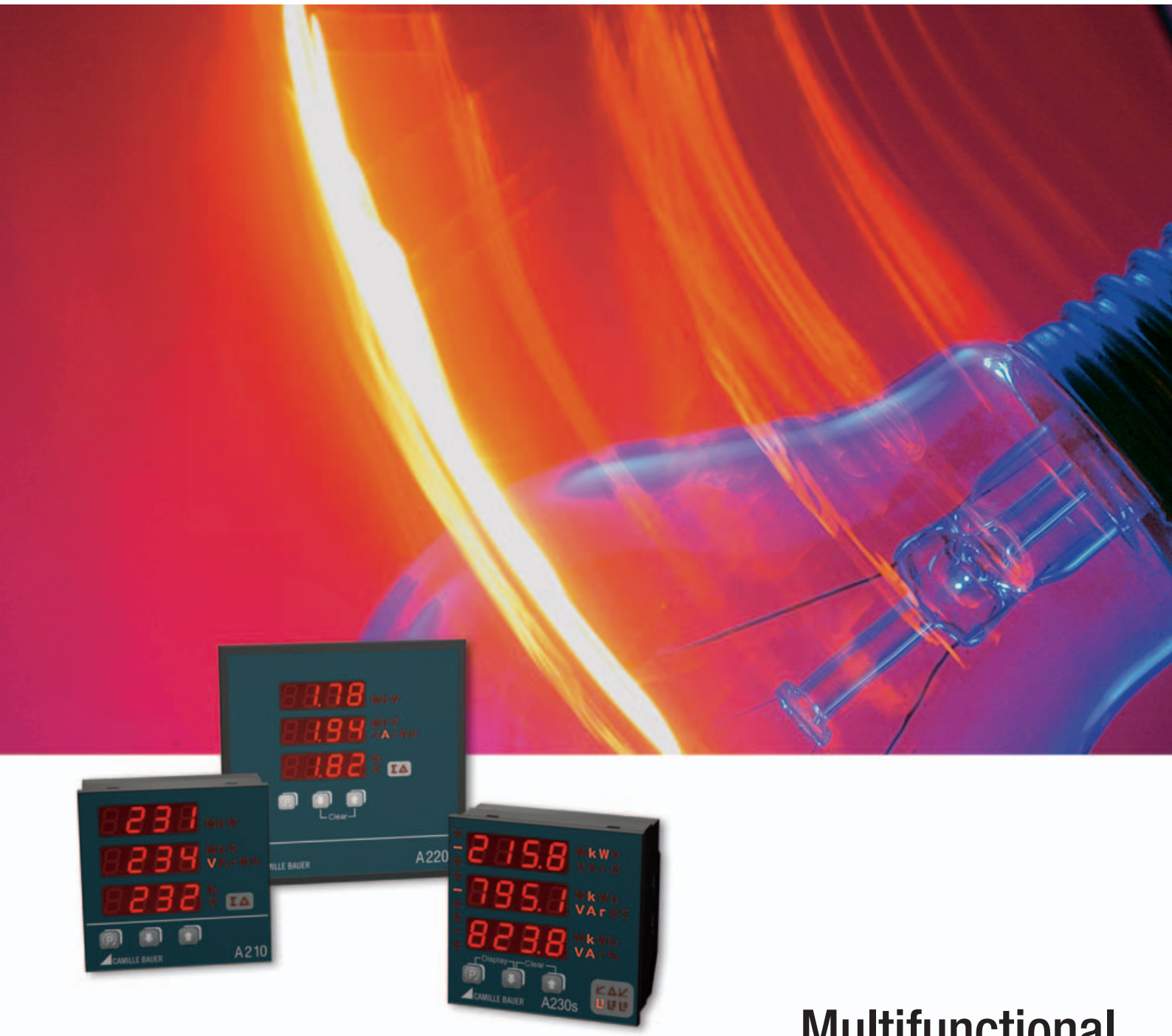

Multifunctional power monitors with system analysis

UL - Selection

SINEAX A210, A220, A230s, A230

Multifunctional power monitors with system analysis

SINEAX A210 and A220

Rational and economic measurement
48 measurands, 8 energy meters, average and max./min. value functions.
The electrical system can be comprehensively assessed in all 4 quadrants.

Displays
The measurands are displayed by high-contrast, 14 mm high, dimmable LEDs with 3 digits and sign (energy meters 8 digits, frequency 4 digits).

Meters
The integrated energy meters record active energy (incoming/outgoing) and reactive energy (inductive/capacitive).
If the digital input of the extension module is used for switching the tariff, the number of active meters is doubled.

Outputs
There are 2 S0 outputs that can be used for controlling relays. Energy impulses or as an alternative, the status of the programmable limits can be output.

SINEAX A230s and A230

Versatile and accurate measurement
134 measurands, 8 energy meters, comprehensive average and max./min. value functions, THD and harmonic analysis, asymmetric voltage and zero displacement voltage.
All these measurands form the basis for the comprehensive analysis and assessment of the electrical system in all 4 quadrants.

Displays
The measurands are displayed by high-contrast, 14 mm high, dimmable LEDs with 4 digits and sign (energy meters 8 digits). In USER mode, measurands that are not required can be suppressed. The LOOP mode displays from 2 to 10 programmable displays sequentially.

Analysis
A trend analysis is available for all the average values. The calculations of the harmonic content and the asymmetry of the system, gives important information on the system status for the operators.

	A210	A220	A230s	A230
Front dimensions	96 x 96 mm	144 x 144 mm	96 x 96 mm	144 x 144 mm
Connection types	Single phase, 3/4 wire balanced, 3/4 wire unbalanced			
Inputs	L-L: 0 – 500 V, L-N: 0 – 290 V, F: 45 – 65 Hz, I: 0 – 1/5A			
Accuracy	U, I: 0,5%; P, Q, S, meters: 1%		U, I: 0,2%; P, Q, S, meters: 0,5%	
Display 14 mm	3 digits + sign		4 digits + sign, programmable	
Power supply	85 – 253 V AC/DC or 20 – 70 V AC/DC			
Outputs	2 digital outputs as pulse or limit outputs			
Measurands	85		266	
Energy meters	8		8	
Mean values	5 P, Q and S mean values each		Various functions	
THD	No		Yes	
Harmonic analysis	No		Up to the 15th harmonic	
Voltage unbalance	No		Yes	
Connections	Spring clamps or screw clamp terminals			
Protection class (front)	IP66			

EMMOD 201, 202, 203, 204, 205

Extension modules

The extension modules enlarge the functionality of the A210, A220, A230s and A230 power monitors. They can be simply snaped onto the back of the basic instrument and take their power supply from it.

	EMMOD 201	EMMOD 202	EMMOD 203	EMMOD 204	EMMOD 205
Interface	RS232/RS485 switchable	—	Ethernet 10/100 Base Tx	Profibus DP (RS485), up to 12 MBit/s	LON
Connections	Screw clamp terminals	Screw clamp terminals	RJ45 and screw clamp terminals	9-pin D-Sub socket, 15 kV ESD protection	Screw clamp terminals
Protocol	Modbus/RTU	—	Modbus/TCP, HTTP, SNTP	Profibus-DP V0, cyclic data exchange	LONTALK
Data memory					
• Storage time (15 min values)	• 166 days (1 quantity)	—	• 1 year (8 quantities)	—	—
• Average values	• up to 14 quantities		• up to 14 quantities		
• Min/Max interval values	• none		• up to 9 quantities		
Time reference	via PC	—	Real time clock, synchronizable via LAN or digital input	—	—
Outputs	—	2 analog outputs, galvanically isolated, 0/4…20 mA, invertable Accuracy ± 0.1% (without A2xxx)	—	—	For type A only: Digital output 125 V for limit monitoring
Digital inputs	Synchronizing input for average values or HT/LT switching for energy meters	—	Synchronizing input for average values and HT/LT switching for energy meters	—	For type E only: Synchronizing input for average values or HT/LT switching for energy meters
Parametrization	Via A200plus software	Via basic instrument	Via A200plus software and browser	Via DMF. Parameters engineered in the control system	Via basic instrument

PC-Software A200*plus*

The clear PC software allows to establish a communication with the devices of the A200 series:

- Upload and modification of all device features: Mesuring input, digital outputs, mean-power values, digital input, logger
- Display of present measurands
- Acquisition of integrated mean-power values
- Display/Set/Reset meter contents
- Display/Reset of minimum/maximum values
- Acquisition of mean-power values stored in the logger
- Direct export of logger data to Microsoft Excel
- Store/load logger data on/from disk
- Executable under Windows 95, 98, ME, NT, 2000, XP, Vista

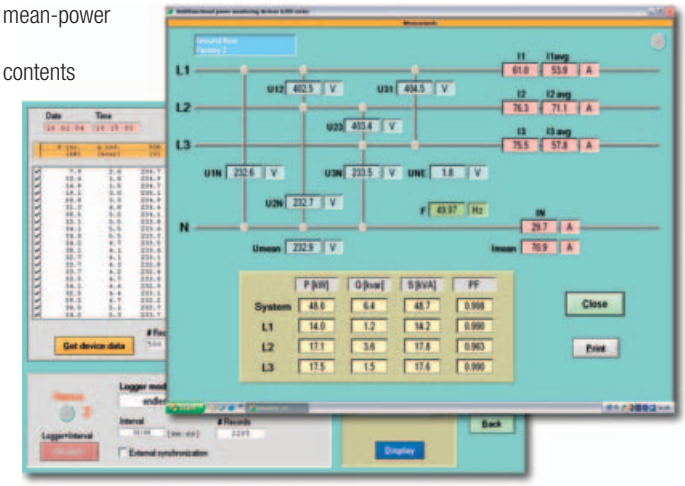

The benefits of the A series

- The good legibility, the simple operation, and the easy-to-use software, guarantee secure installation and operation.
- The flat design makes more space available in your cabinet.
- The high functionality saves costs for engineering, installation and documentation
- You only pay for the required functions, thanks to the modular extensibility.
- The settings and measurands are power fail-safe.

Product ranges of Camille Bauer

Heavy-current: State, Allocation, Quality.

Angular position: Angle, Inclination, Position, Volume.

Process control: Temperature, Signal conversion, Process management.

Printed in Switzerland • Subject to change without notice • SM-1028-000-00-EN-05.11

CAMILLE BAUER

Rely on us.

Camille Bauer AG
Aargauerstrasse 7
CH-5610 Wohlen / Switzerland

Phone +41 56 618 21 11
Fax +41 56 618 35 35

info@camillebauer.com
www.camillebauer.com